YASKAWA
A World of Automation Solutions™

Job Name:
Contractor:
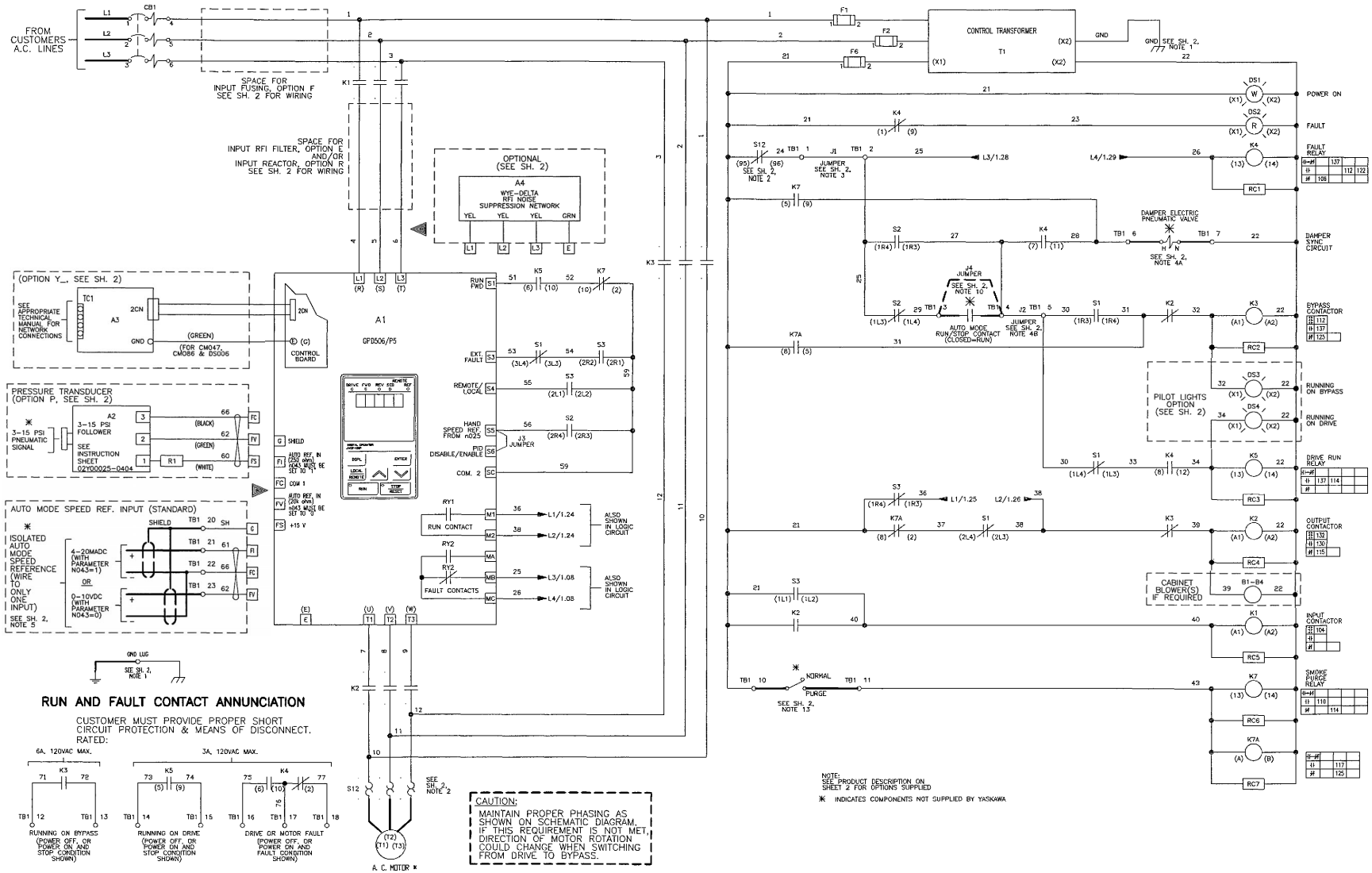
Document: C21-OT-F
Sheet 1 of 2