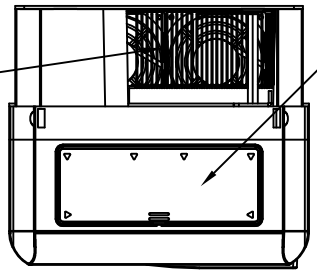

NOTE:
PROTECTIVE COVERS ARE FACTORY INSTALLED TO THE TOP AND BOTTOM OF THE DRIVE TO MEET IP20 & NEMA TYPE 1 REQUIREMENTS, RESULTING IN AN AMBIENT TEMPERATURE RATING OF 104F(40C). REMOVE THESE COVERS WHEN OPERATING THE DRIVE WITHIN A PANEL TO OBTAIN THE MAXIMUM SURROUNDING AIR TEMPERATURE RATING OF 113F(45C). REMOVING THESE COVERS RESULTS IN AN ENCLOSURE RATING OF IP00.

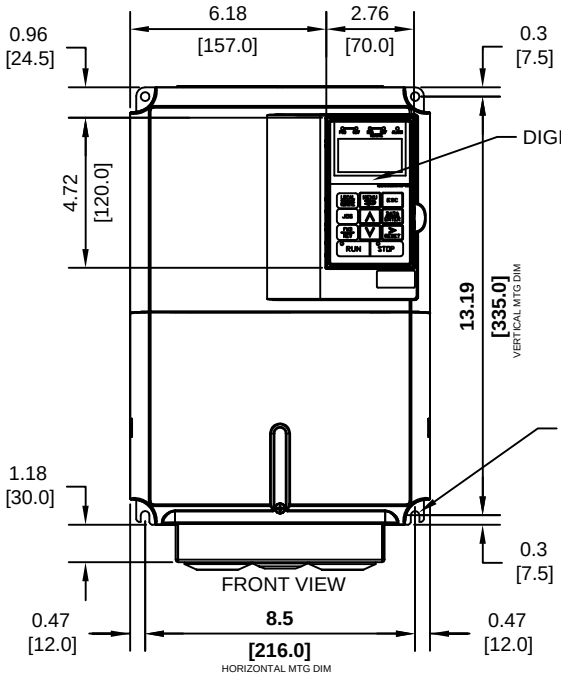

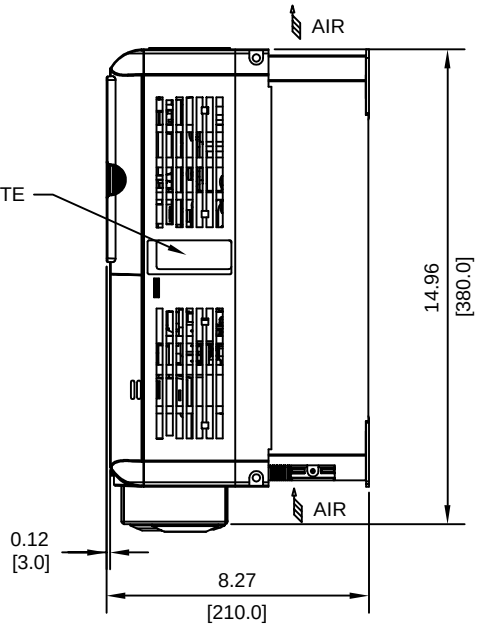

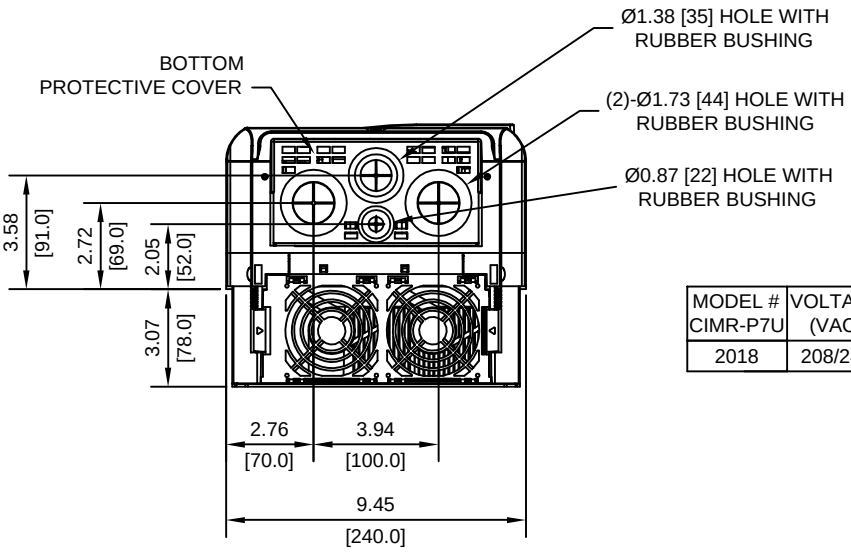

MODEL # CIMR-P7U	VOLTAGE (VAC)	OUTPUT CURRENT (A)	WEIGHT LBS (Kg)	HEAT LOSS (W)		
				INT	EXT	TOTAL
2018	208/240	74.8	24.2 (11.0)	208	472	680

INT=INTERNAL COMPONENTS
EXT=EXTERNAL HEATSINK

FOR ADDITIONAL DETAILS AND SPECIFICATIONS, CONSULT MANUAL

TOLERANCES/REFERENCES:
-
-
-
-
-
-

UNITS: IN[mm] | SCALE: 1:6

YASKAWA
A World of Automation Solutions™

YASKAWA ELECTRIC AMERICA, INC.
Corporate Headquarters
2121 Norman Drive South
Waukegan, IL 60085
1-800-YASKAWA
http://www.yaskawa.com

DRAWN: J. MATTAS	DATE 4-6-05	TITLE: P7 DIMENSION DRAWING FRAME SIZE 4C NEMA TYPE 1/IP20 AND IP00 P7U2018
CHECKED: M. RUCINSKI	DATE 5-3-05	
TECH: J. CAIRO	DATE 4-7-05	
APPROVED: T. SASADA	DATE 6-6-05	SIZE A / REVISION R00 / PAGE 1 of 2
ORIGINAL DESIGN: -	DATE -	DRAWING #: DD.P7.FR4C.N1.01

TERMINAL AND WIRING DETAILS (SCALE 1:6)

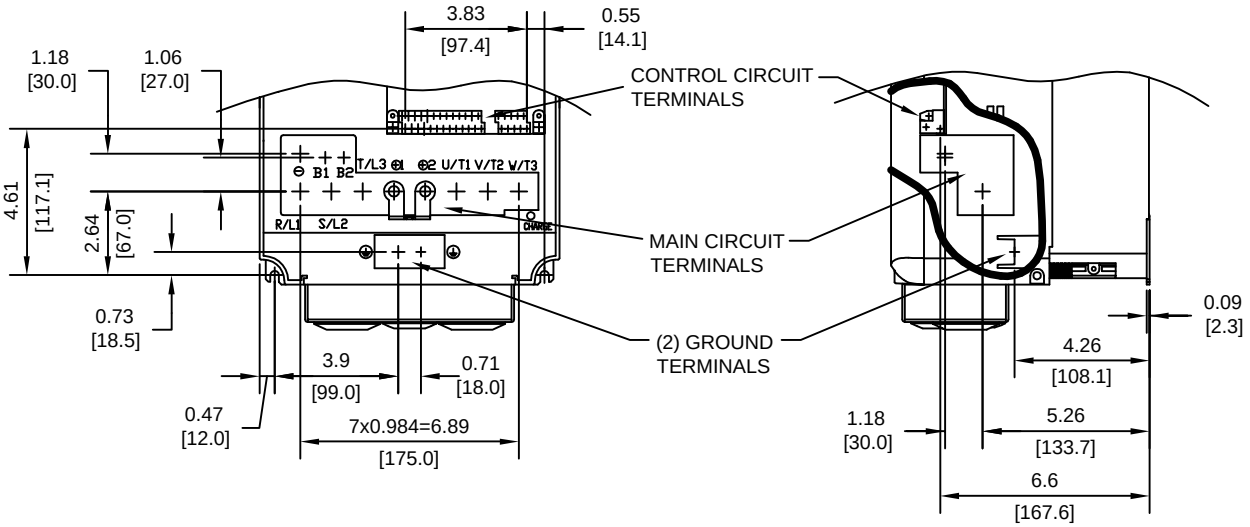

TERMINAL AND WIRE SPECIFICATIONS FOR MAIN CIRCUIT AND GROUND

MODEL # CIMR-P7U	TERMINAL SYMBOL	TERMINAL SCREW	CLAMPING TORQUE lb.in.(N.m.)	WIRE RANGE AWG(mm^2)
2018	R/L1, S/L2, T/L3, ⊖, ⊕1, ⊕2, U/T1, V/T2, W/T3	M8	79.2 TO 88.0 (9.0 TO 10.0)	8-1 (8-50)
	B1, B2	M5	20.4 TO 22.0 (2.3 TO 2.5)	12-6 (3.5-14)
	⏚	M6	35.2 TO 44.0 (4.0 TO 5.0)	SEE NOTE

NOTE: REFER TO APPLICABLE CODES FOR PROPER WIRE TYPE AND SIZE

MINIMUM INSTALLATION CLEARANCES (SCALE 1:10)

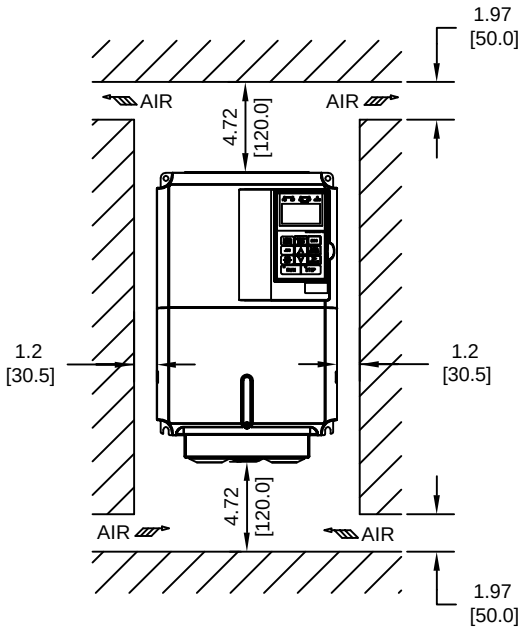

PANEL CUTOUT FOR EXTERNAL HEATSINK MOUNTING CONFIGURATION (SCALE 1:8)

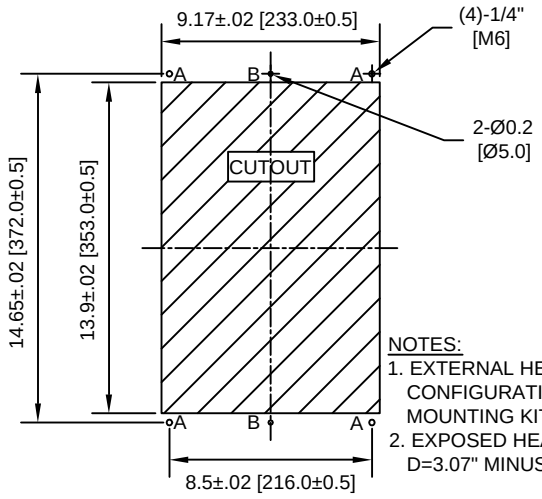

NOTES:
1. EXTERNAL HEATSINK CONFIGURATION REQUIRES MOUNTING KIT
2. EXPOSED HEATSINK DEPTH D=3.07" MINUS PANEL THICKNESS

FOR ADDITIONAL DETAILS AND SPECIFICATIONS, CONSULT MANUAL

TOLERANCES/REFERENCES: - - - - - -	YASKAWA A World of Automation Solutions™	DRAWN: J. MATTAS	DATE 4-6-05	TITLE: P7 DIMENSION DRAWING FRAME SIZE 4C NEMA TYPE 1/IP20 AND IP00 P7U2018
	YASKAWA ELECTRIC AMERICA, INC. Corporate Headquarters 2121 Norman Drive South Waukegan, IL 60085 1-800-YASKAWA http://www.yaskawa.com	CHECKED: M. RUCINSKI	DATE 5-3-05	
		TECH: J. CAIRO	DATE 4-7-05	SIZE A / REVISION R00 / PAGE 2 of 2
		APPROVED: T. SASADA	DATE 6-6-05	
UNITS: IN[mm] / SCALE: BY VIEW		ORIGINAL DESIGN: -	DATE -	DRAWING #: DD.P7.FR4C.N1.01